PARASOL 3 × 3 m/8 HUT - model 112



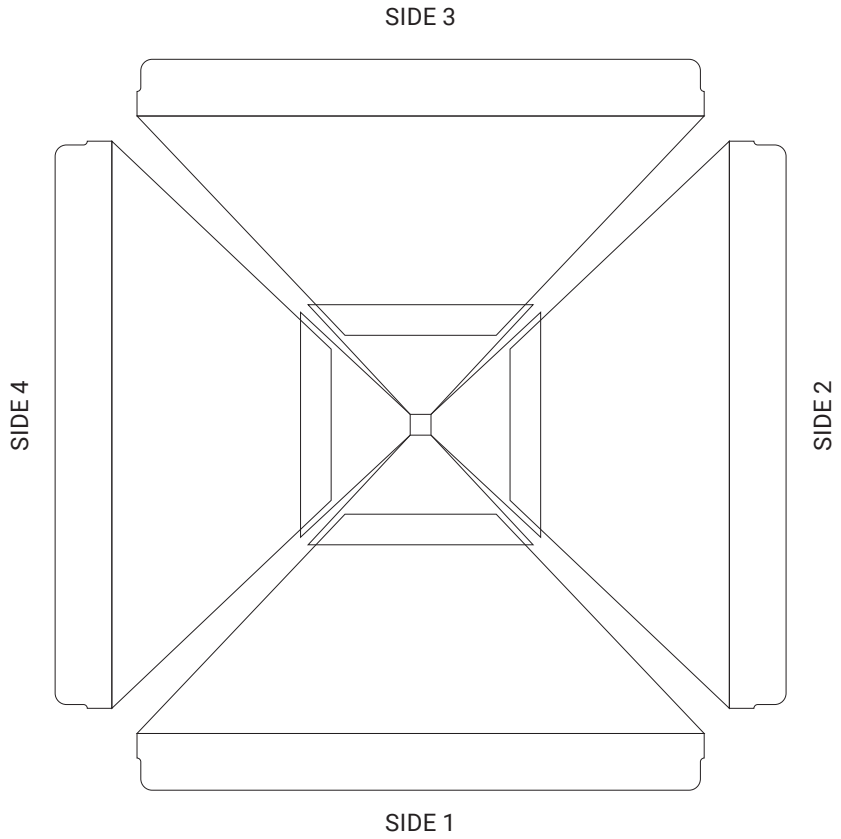

SIDE 1, 3

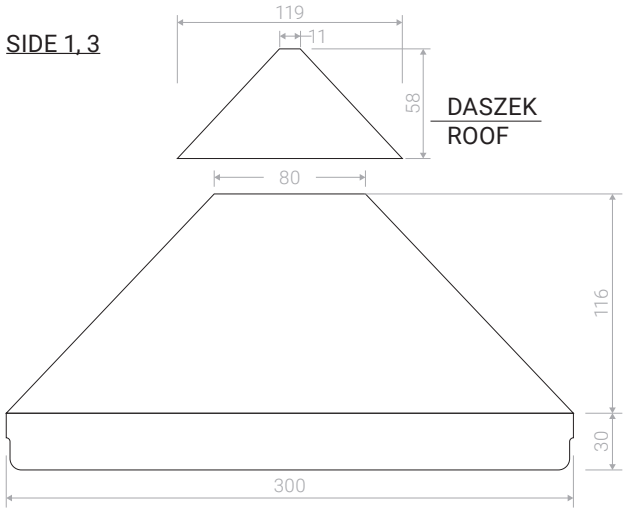

SIDE 2, 4

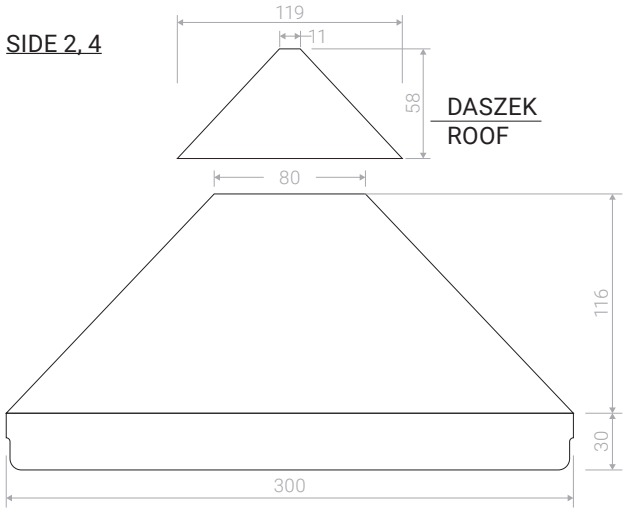

COLOR

PRINTING PREFERRED IN PANTONE COLORS
(PMS - PANTONE MATCHING SYSTEM)

SCALE

MEASUREMENTS IN CM

