PARASOL 4 × 4 m/8 - model 134

perfecta PARASOLS

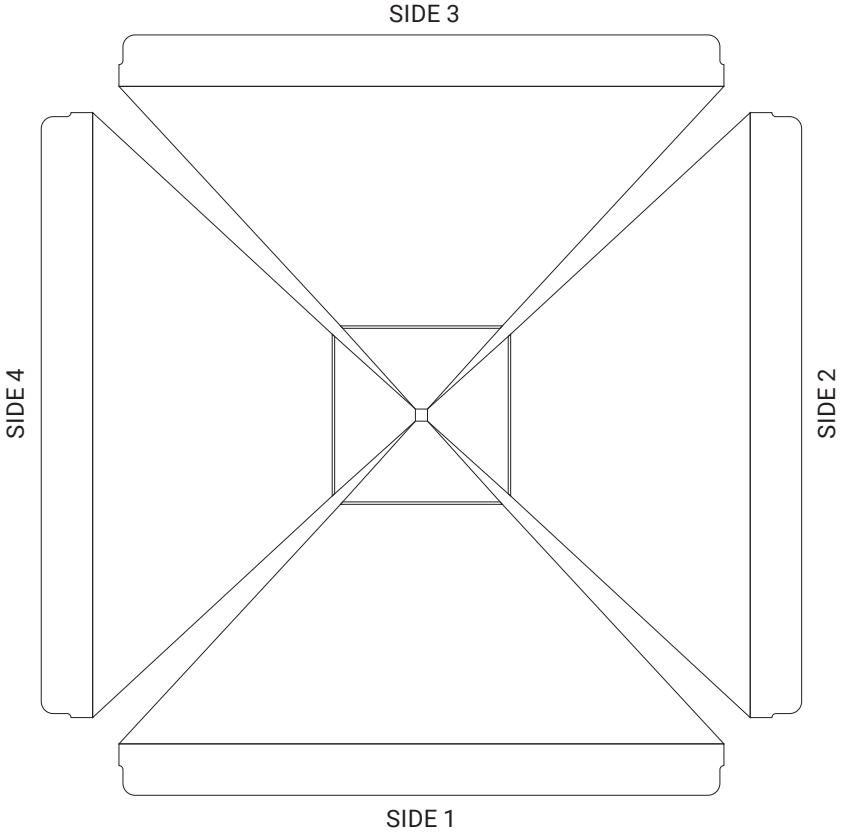

SIDE 1, 3

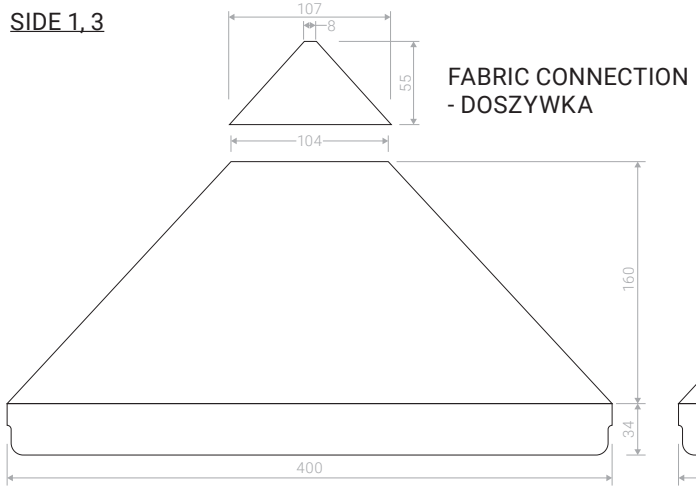

FABRIC CONNECTION
- DOSZYWKA

SIDE 2, 4

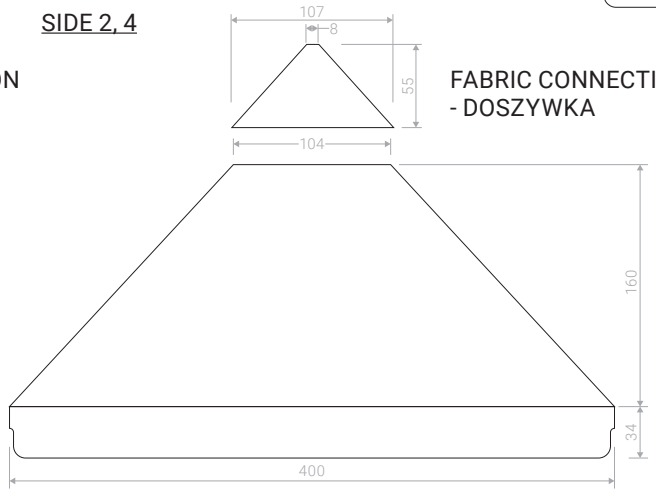

FABRIC CONNECTION
- DOSZYWKA

COLOR

PRINTING PREFERRED IN PANTONE COLORS
(PMS - PANTONE MATCHING SYSTEM)

SCALE

1 m

MEASUREMENTS IN CM